Proof
Version 2.A

Stan Design
Scorpion Jacks Greenline
Sell Sheet
Size: 8.5 in x 11 in

8.5”

11”

LITHIUM BATTERY HYDRAULIC JACK

EJ20-1

SCORPION JACKS GREENLINE

- **Cordless Power**
  Convenient, energy-efficient power for use anywhere

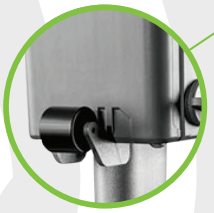

- **Anti Collision Wheel**
  for Battery Pack protection

- **Elliptical Handle**
  Stunning design with built-in connecting rod.

- **Multiple Adaptors**
  Small, medium and large to suit any situation

- **Industrial Seals**
  High quality seal for maximum performance

- **Dual Safety Valve System**
  Slow descent control and overload protection ensure safe, stable lifting

- **LED Lamp**
  Locate lifting point with ease.

MODEL EJ20-1	
Capacity	30t/15t
Battery Capacity	5000mAh
Rated Voltage	DC 18V
Rated Power	400W
Rated Current	20A
Battery Energy	90Wh
Net Weight	45kg
Packing Size	720x320x320mm
Min Height	150mm
Max Height	418mm
Lifting Height	30t: 78mm / 15t: 70mm

A	695mm
B	272mm
C	1300mm
D	172mm
E	150mm
F	78mm
G	70mm
H1	75mm
H2	45mm
α	45°
β	35°

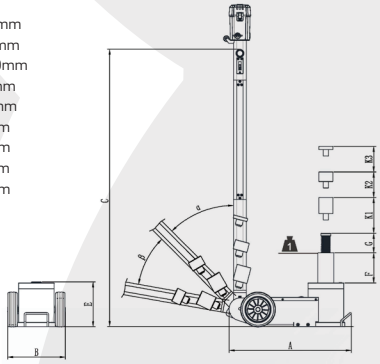

- **Dual Speed Piston Rod**
  Fast rapid extension or Slow precise positioning.

- **Hard Chrome-Plated Cylinder:**
  Enhanced durability and corrosion resistance for long service life

STAN JACKS 1-866-782-6529 STANJACKS.COM

Proof
Version 2.B

Stan Design
Scorpion Jacks Greenline
Sell Sheet
Size: 8.5 in x 11 in

8.5”

11”

LITHIUM BATTERY HYDRAULIC JACK

EJ20-1

Anti Collision Wheel

LED Light

FEATURES

- **Cordless Power:** Convenient and energy-efficient, use anywhere.
- **Dual Speed Piston Rod:** Fast rapid extension or Slow precise positioning.
- **LED Lamp:** Locate lifting point with ease.
- **Elliptical Handle:** Stunning design with built-in connecting rod.
- **Industrial Seals:** High quality seal for maximum performance.
- **Hard Chrome-Plated Cylinder:** Enhanced durability and corrosion resistance for long service life.
- **Dual Safety Valve System:** Slow descent control and overload protection ensure safe, stable lifting.

MODEL EJ20-1	
Capacity	30t/15t
Battery Capacity	5000mAh
Rated Voltage	DC 18V
Rated Power	400W
Rated Current	20A
Battery Energy	90Wh
Net Weight	45kg
Packing Size	720x320x320mm
Min Height	150mm
Max Height	418mm
Lifting Height	30t: 78mm / 15t: 70mm

A=695mm, **B**=272mm, **C**=1300mm,
D=172mm, **E**=150mm, **F**=78mm, **G**=70mm,
H1=75mm, **H2**=45mm, **α**=45°, **β**=35°

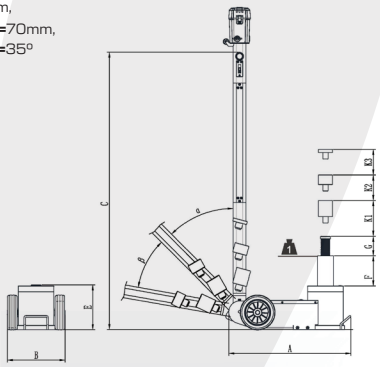

STAN JACKS 1-866-782-6529 STANJACKS.COM